REVISIONS		
ISS	ZONE	DESCRIPTION\PER REQUEST\DATE

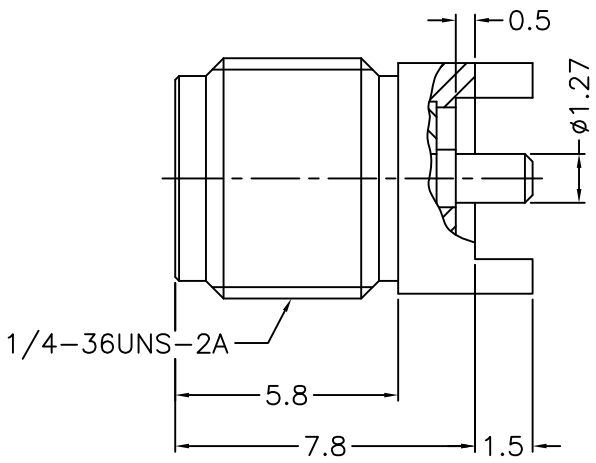

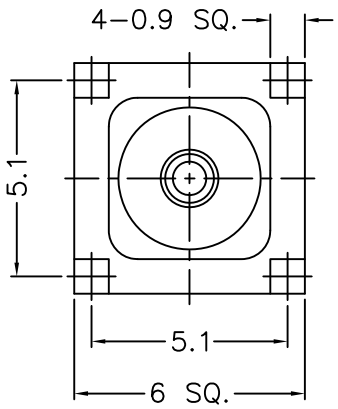

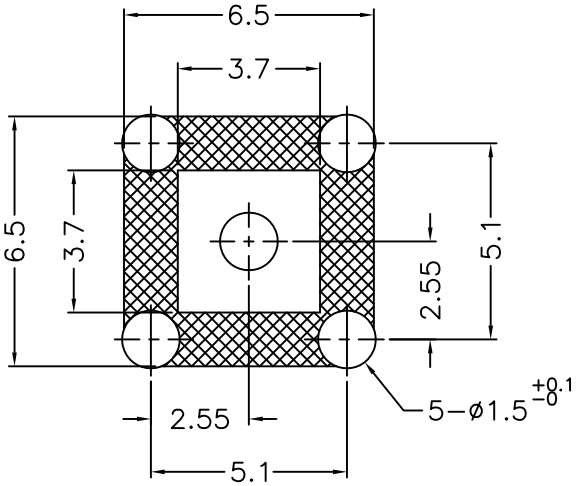

PCB MOUNTING HOLE
（印刷電路板架設孔）

NOTES: FINISH (PLATING THICKNESS IN MICRO–INCHES)
1. BRASS
2. THIN GOLD OVER NICKEL PL. 50 MIN. THICK OVER COPPER PL. 50 MIN. THICK
3. BERYLLIUM COPPER
4. GOLD PL. 3 MIN. THICK OVER NICKEL PL. 50 MIN. THICK OVER COPPER PL. 50 MIN. THICK
5. TEFLON

RoHS COMPLIANT

NO.	DESCRIPTION	MATERIAL	FINISH	Q'TY	DRAWING NO.
3	CONTACT PIN	NOTE 3	NOTE 4	1	1436–6251A18–3
2	INSULATOR	NOTE 5	NATURAL	1	1436–6251A18–2 –50T
1	BODY	NOTE 1	NOTE 2	1	1436–6251A18–1

DIMENSIONS ARE IN MILLIMETERS

UNLESS OTHERWISE SPECIFIED TOLERANCES
0.5–6 = ±0.2
6–30 = ±0.4
30–120 = ±0.6
120–315 = ±1
315–1000 = ±1.6
1000–2000 = ±2.4

SCALE	5/1	ISSUE	A

PART NO.

APPROVED DATE 10–27–'15

CHECKED DATE 10–27–'15

DRAWN DATE 10–27–'15

G.L.I.

TITLE
SMA PCB MOUNT JACK

DRAWING NO.
1436–6251A18–50

FILE NO. R:\D\G\DWG\1436\6251A18\50